FIRST ANGLE PROJECTION

ALL DIMENSIONS ARE IN mm

DRAWING NO. 36680801255

COPYRIGHT AND CONFIDENTIAL
The information on this document is the property of Bharat Heavy Electricals Limited.
It must not be used directly or indirectly in anyway detrimental to the interest of the Company

REF. DRG.NO. 388018-1044 R08

SIGN & DATE

INVENTORY NO.

Parts List				
ITEM	QTY	PART NUMBER	DESCRIPTION	MATERIAL
2	1	DIN L50x50x4 00000001	L50x50x4	Stainless Steel 1.4301
3	1	DIN L50x50x4 00000002	L50x50x4	Stainless Steel 1.4301
4	1	DIN L50x50x4 00000003	L50x50x4	Stainless Steel 1.4301
5	1	DIN L50x50x4 00000004	L50x50x4	Stainless Steel 1.4301
6	1	DIN L50x50x4 00000007	L50x50x4 (150 L)	Stainless Steel 1.4301
7	1	DIN L50x50x4 00000011	L50x50x4 (150 L)	Stainless Steel 1.4301
8	2		Plate	Stainless Steel 1.4301
9	1	Pump-Bracket plate-2	Plate	Stainless Steel 1.4301
10	2	3 668 08 01359	cable strip-1	Stainless steel 1.4301
11	2	DIN 929 - M5 weldnut	M5 - Weldnut	Stainless steel

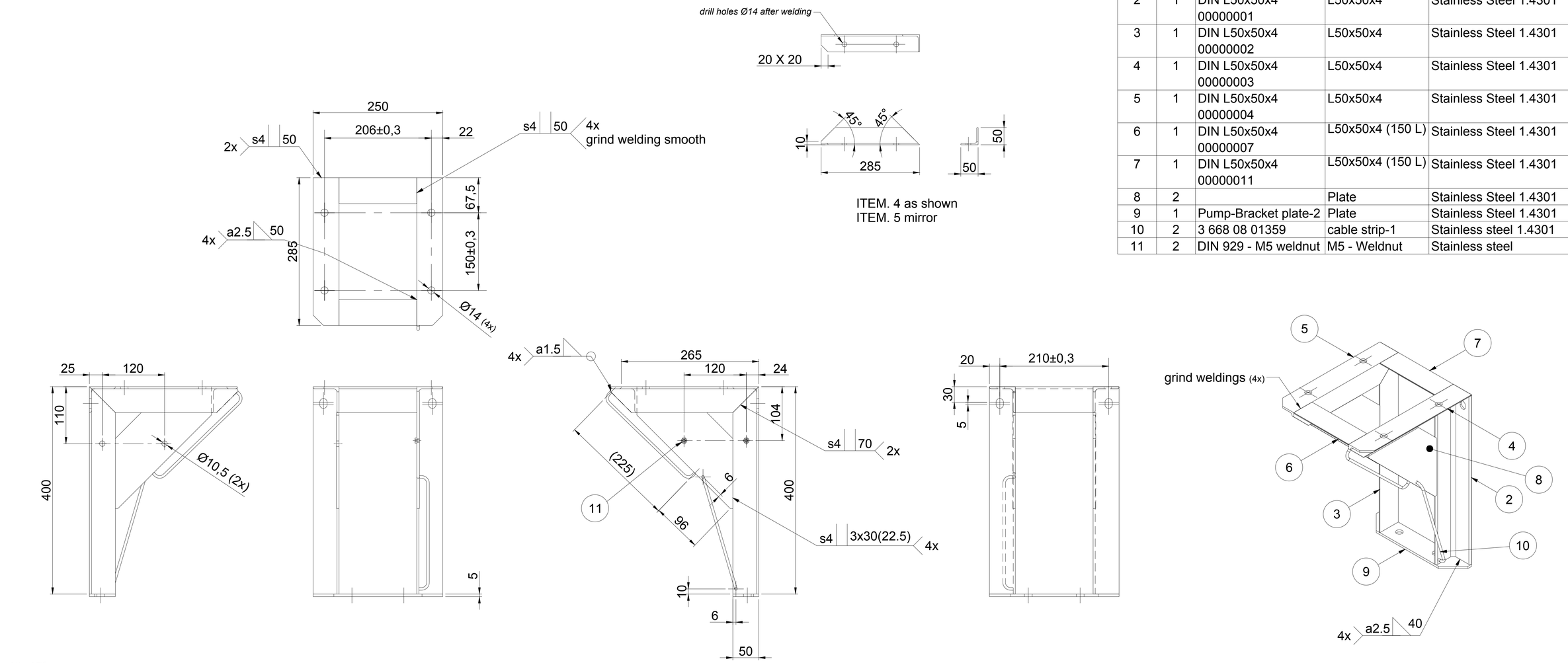

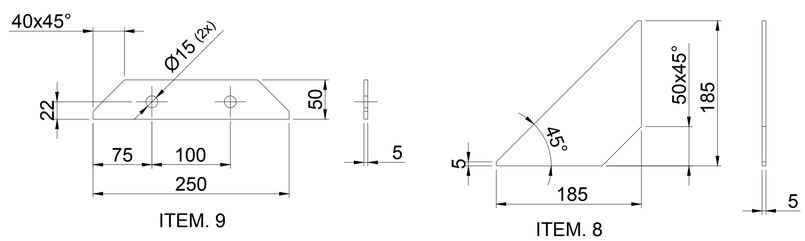

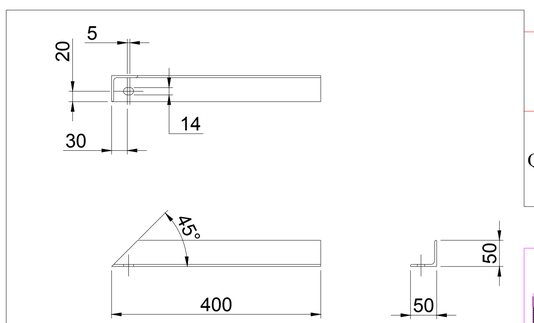

Note:-
Welding acc. to EN 729-4
Pickling and passivating acc. to EN 2516
Remove sharp edges
DRG : SHOULD BE READ IN THIRD ANGLE PROJECTION

QTY.	ITEM No.	DESCRIPTION	DRAWING NO.	ITEM No. / VARI ANT	MATERIAL CODE / MATERIAL SPECN.	UT.Wt. (kgs) / QTY.

CARD TYPE 2 ← → CARD TYPE 1

BHARAT HEAVY ELECTRICALS LIMITED.
ELECTRONICS DIVISION, BANGALORE

	NAME	SIGN.	DATE	No. OF
DRN	SURENDRA		03.02.17	
CKD	ASHWATH		03.02.17	
APPD	DEVANAND		03.02.17	

REV.	DATE	ALTERED / CHECKED / APPROVED
01	29.03.18	ALTERED T K M CHECKED T K Murthy APPROVED Devanand V

Additional Dimensions included.

DEPT. TE
CODE 445
FOR UNSPECIFIED-TOLERANCES REFER ED 0230499
SCALE 1:1
WEIGHT(Kg)
REF. TO ASSY. DRG.
ITEM NO.
No. OF

TITLE Pump Support Assy.

DRAWING NO. 36680801255
REV. 01
SHEET NO. 01
NO. OF SHEETS 01

FORM No. A3-01

A3 SIZE